R&D

NESTER

REAL TIME POWER SYSTEMS SIMULATION LABORATORY

SHORT DESCRIPTION

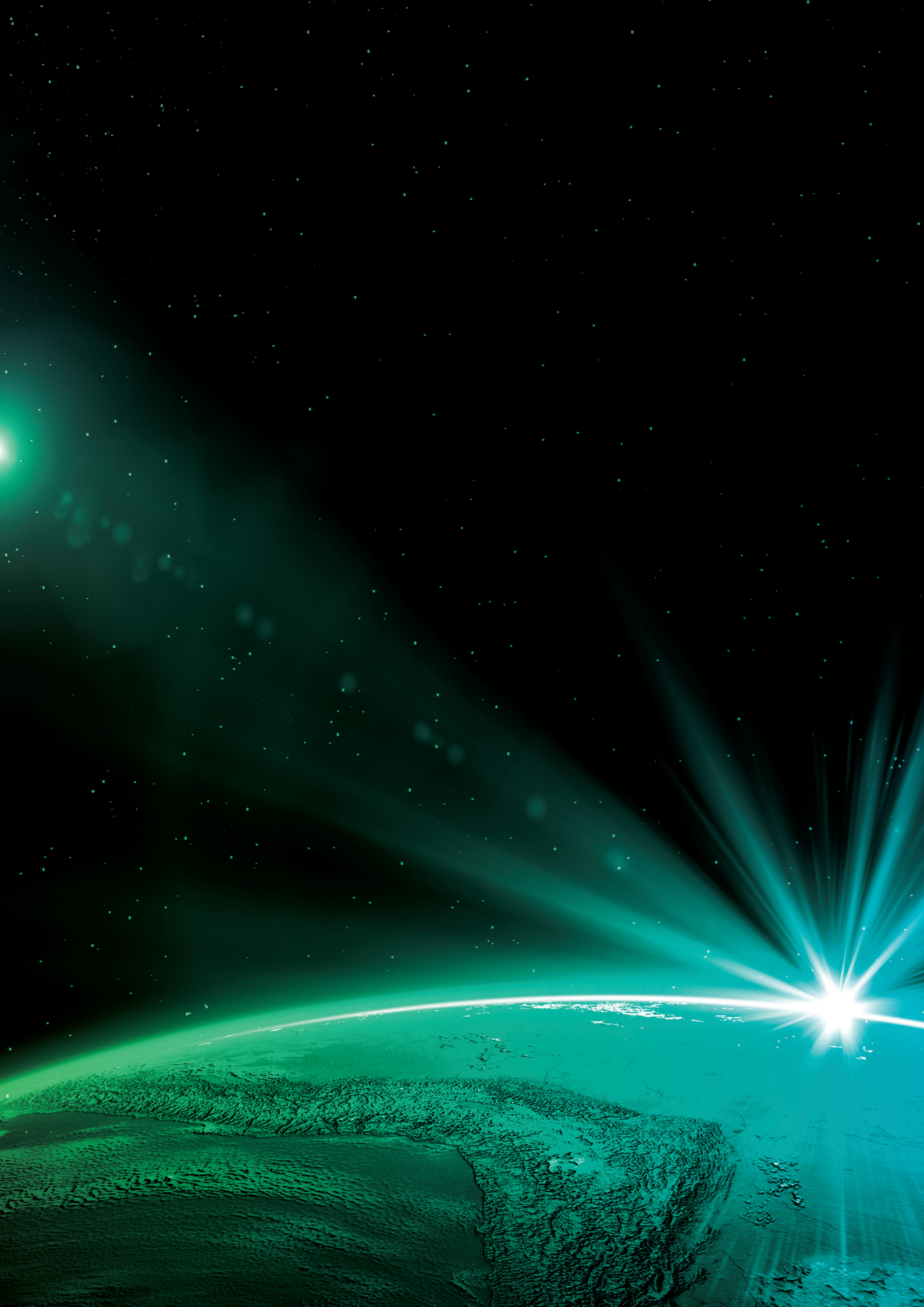

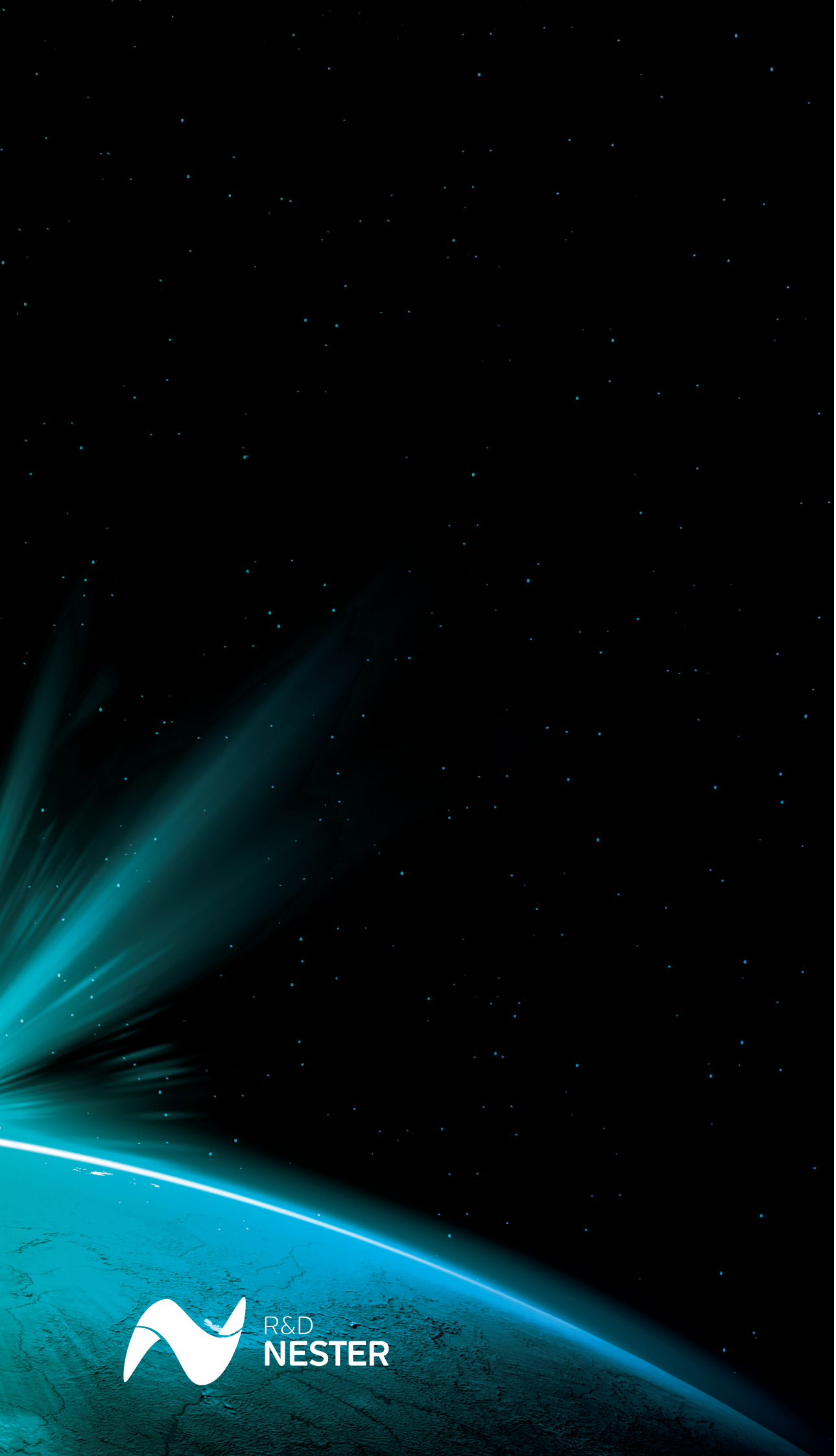
R&D
NESTER

TABLE OF CONTENTS

1. INTRODUCTION — 05
2. REAL TIME POWER SYSTEMS SIMULATORS — 05
2.1 OP5600 Simulator — 05
2.2 ADPSS Advanced Digital Power System Simulator — 06
3. OTHER EQUIPMENT AND SOFTWARE — 07
3.1 Power amplifiers — 07
3.2 Communication networks simulator and testing tools — 07
3.3 IEC 61850 specification, configuration and testing tools/ equipment — 08
3.4 Time synchronization servers — 09
3.5 Communication infrastructure — 09
4. POSSIBLE APPLICATIONS — 10

1. INTRODUCTION

R&D Nester – Centro de Investigação em Energia REN – State Grid S.A. owns a laboratory for real time simulation of power systems, which main assets are two real time power system simulators (RTPSS) acquired from two different manufacturers.

To complement these two RTPSS, different hardware and software tools are also used, enabling the simulation of power systems and communication networks (either in a standalone mode or performing co-simulation).

This document contains a short description of the facilities and envisages some possible applications considering the different equipment that complement the two RTPSS.

2. REAL TIME POWER SYSTEMS SIMULATORS

The laboratory for real time simulation of power systems is based upon the existence of two RTPSS acquired from two different manufacturers. These two devices are complementary and their existence allows a wide range of applications in Power Systems simulation. Besides their main application on simulating power systems, the two RTPSS provide a very high computational power that can be used for other applications. This can be achieved by installing different software programs in the simulators, taking advantage of their great capabilities, both in terms of processing power and memory.

A short description of both devices is now performed, highlighting the main characteristics of each one.

2.1 OP5600 SIMULATOR

One of the existing simulators is manufactured by OPAL-RT, a Canadian company which is one of the world leaders in the development of real time simulation devices and Hardware-in-the-Loop (HIL) testing equipment. The simulator at R&D NESTER laboratory has the following main characteristics:

- A 32-core UNIX based computer (OPAL OP5600) which is the main equipment responsible for running real time simulations. This server has a total of 64 Gb of RAM memory, which also allows the running of highly complex processes;
- Two expansion chassis (interfaces), each one providing a set of digital and analog inputs/outputs, which enables the execution of HIL tests. The total number of ports per chassis is: 16 Analog Outputs, 64 Digital Inputs and 64 Digital Outputs;
- Three different families of software: Hypersim, eMEGAsim and ePHASORsim, which have the capability to simulate large power networks (up to 2000 buses in EMT simulation using Hypersim or 10000 buses in electromechanical transient stability using ePHASORsim). eMEGAsim offers the user the possibility to simulate complex and fast transient responses such as power electronics converters and control systems. It allows a minimum time step of 10 μs, whereas Hypersim has a typical time step of 50 μs and ePHASORsim has a time step of 10 ms;
- The simulator has the ability to communicate using different protocols, including IEC61850 and is aware of different protocols such as PTP for time synchronization; for the IEC 61850 communication, there are 16 RJ45 ports at the expansion chassis.

2.2 ADPSS - ADVANCED DIGITAL POWER SYSTEM SIMULATOR

ADPSS is the first simulator worldwide that can perform real time simulation of large scale complex AC/DC power systems with up to 3000 generators and 30000 buses. This RTPSS is developed by China Electric Power Research Institute (CEPRI). The hardware solution existing at R&D NESTER facilities has the following main characteristics:

- Three high performance computing clusters, with 20 cores each (complemented by 32 Gb of RAM each), performing a total of 60 cores for real time simulation purposes. These three real time servers run in a UNIX platform designed for real time applications and are connected through a high speed InfiniBand (40 Gbit) network;
- A physical interface box, which provides the user a total of 48 Analog Outputs, 160 Digital Inputs and 160 Digital Outputs, for HIL testing;
- A digital interface box, specially designed for IEC 61850 applications, providing four interface cards, two for Sampled Values and two for GOOSE messages. Each card has a total of 6 optical outputs allowing a direct connection to Intelligent Electronic Devices (IED's);
- Two different software families: PSASP for electromechanical transient stability simulations and ETSDAC/ADPSS that allows EMT simulations:

- PSASP provide different power systems simulation modules to the user, allowing the simulation of: Load flow; Transient stability; Short-circuit; Optimal load flow and reactive power optimization; Static security analysis; Network loss analysis; Static and dynamic equivalence calculation; User-defined model and program interface; Direct stability calculation; Small signal stability analysis; Voltage stability analysis; Relay protection setting calculation; Linear/non-linear parameter optimization; Harmonic analysis; Distributed off-line computing platform; Power system risk evaluation system; Transient stability limit automatic solution; Load current anti-icing and de-icing measures.
- ETSDAC can be used for: Analysis of power system fault; Analysis of transient overvoltage and overcurrent; Dynamic characteristic simulation of high-voltage direct current transmission system; Analysis of sub-synchronous oscillation phenomenon; Design of PSS or other control parameters; Design of high-voltage direct current transmission (HVDC) system and flexible alternating current transmission system (FACTS).

- Hybrid simulation of electromechanical and electromagnetic transient (ST-EMT Hybrid) is an important feature of ADPSS. Co-simulation of fast and slow timescale with different time steps can then be performed by applying ST-EMT Hybrid parallel simulation interface. This simulation mode will take advantage of both software (PSASP and ETSDAC) capabilities.

3. OTHER EQUIPMENT AND SOFTWARE

The existence of the two RTPSS with other auxiliary equipment and software build an integrated and powerful laboratory simulation and testing environment, which enables not only the simulation of different phenomena in Power Systems and in Communication Networks but also the testing of new products, and the verification and demonstration of new technologies as well. The different hardware /software tools that exist at the R&D NESTER laboratory are summarized in the next sections.

3.1 POWER AMPLIFIERS

The laboratory is equipped with four three-phase power amplifiers (OMICRON CMS156 Three Phase Power Amplifier) whose main characteristics include:

- Each amplifier has the ability to work as a voltage or a current amplifier in a three-phase, single phase or DC configuration. The maximum operating points can be summarized as:

- Voltage Amplifier
  - Three Phase: Maximum of 3 x 75 VA at 75 .. 250 V;
  - Single Phase: Maximum of 150 VA at 75 .. 500 V;
  - DC: Maximum of 212 W at ±(150 .. 250 V).
- Current Amplifier
  - Three Phase: Maximum of 3 x 70 VA at 7.5 A. Range of currents: 0 .. 25 A;
  - Single Phase: Maximum of 210 VA at 22.5 A. Range of currents: 0 .. 75 A;
  - DC: Maximum of 140 W at ±(10.5 A). Range of currents: -25 .. 25 A.
- These amplifiers allow different low voltage inputs such as the signals generated by other laboratory devices (e.g., OMICRON CMC850) including the outputs of the RTPSS.

3.2 COMMUNICATION NETWORKS SIMULATOR AND TESTING TOOLS

The capability of simulate and test communication networks is crucial in the new paradigm of smart power systems. Considering this, the laboratory is also equipped with a different devices and software tools dedicated to communication networks including:

- A fast discrete event-simulation engine for simulation of communication networks (Riverbed Modeler – former OPNET – software suit) providing a suit of protocols and technologies to design, model and analyze communication networks. It allows the development of models for different technologies (including Ethernet, IPv4, IPv6, VoIP, TCP, OSPF, MPLS, etc.) and uses not only user - designed models but also contains a library of models based in real devices such as network generators, switches and routers from the main manufacturers worldwide. It also allows the connection of real devices using HIL techniques that enables the user to simulate in real time the behavior of real communication devices and analyze their behavior in a wide range of network conditions;

- A device to perform network impairment and a traffic generator (IXIA XM2 modular chassis allowing great flexibility). The existence of these devices and the software IxNetwork allows the generation of background traffic to verify the behavior of network devices under different conditions (different traffic levels and/or other simulated network problems) and to perform impairment of network packets and verify the response of different devices (in the communication and power system networks) considering this phenomena;

- A device to measure the performance of the communication network (IXIA 3500), considering different packet analysis. It allows the measurement of jitter and other network characteristics. Particularly, it can be applied to time synchronization packets (PTP) and consider different metrics such as phase accuracy and Time of Day error to perform synchronization analysis, besides impairing PTP frames.

3.3 IEC 61850 SPECIFICATION, CONFIGURATION AND TESTING TOOLS/ EQUIPMENT

IEC 61850 is the main communication standard for the development of the next generation electrical substations automation systems. The laboratory at R&D NESTER is equipped with a different software tools and devices allowing a full spectrum of tests under the framework of the standard in the different stages of application including specification of substations; configuration of devices and testing of solutions. Different devices and/or software tools include:

- A specification and configuration tool (Helinks STS software) for substations under the framework of the standard IEC 61850. It allows the user to easily develop the substation architecture (following the standard) and integrate different manufacturer devices, improving the interoperability in the substation design. The software helps the user to develop an architecture in conformity with the standard and allows the fast detection and correction of non-conformities. It provides the user with a global vision of the engineering process of the standard allowing a bottom up (start implementation from each IED up to the substation system) or top down (from the general substation architecture to individual IED's configuration) engineering approach;
- A software family (DNV GL – former KEMA – IEC 61850 software family) consisting on a large spectrum of testing tools for substations under the framework of the standard IEC 61850. The different software modules include:

- SCL Checker: allows an automatic verification of Substation Configuration Language (SCL) files, saving debugging time. The software verifies if the SCL files are designed according to the IEC 61850 standard (both edition 1 and 2) also providing an automatic tool to compare and detect any mismatches between a real device and the SCL data model.
- Client and GOOSE simulators: provide the ability to verify if the system is implemented according to the standard and interoperability with third party devices. The Client Simulator allows the simulation of a complete IEC61850 client and the GOOSE simulators allows the construction and send of GOOSE messages through the network and evaluate the behavior of simulated or real devices.
- Multi IED simulator: allows the simulation of different Intelligent Electronic Devices (IED's) which results in a great flexibility for the simulation of substation architectures.

- A protection test set dedicated to IEC61850 including:

- A device (OMICRON CMC 850 equipment) that allows the generation of GOOSE and Sampled Values messages to be sent via network to the devices under test, thus performing open loop tests of IED's. It also has a low-level analog output, which can be used to control the power amplifiers (CMS 156 amplifiers via a CMLIB A box – there are 6 CMLIB A devices in the laboratory).
- A binary input/output terminal (OMICRON ISIO 200 equipment) with IEC 61850 GOOSE interface, allows an expansion of the number of binary I/O's in combination with the protection test set (OMICRON CMC 850). It also converts the IEC61850 GOOSE messages to binary signals for direct connection to specific IED's.
- Management and testing software: consists in a user-friendly windows-based tool that provides complete flexibility and adaptability to different testing applications. Using this software, it is possible to control and monitor the different hardware devices of the test set (OMICRON CMC 850 and ISIO 200).
- Software to discover IED's present in the network and decode Sampled Values messages (OMICRON IEDScout and SVScout software): two solutions to work under the framework of the standard IEC 61850. The first one allows the user to access the IEDs and program their behavior. It contains a parser to check the quality of the SCL files of the IED. The second one allows a quick decode of the Sampled Values messages, allowing the user to graphically see the currents and voltages contained in the SV messages.

3.4 TIME SYNCHRONIZATION SERVERS

The laboratory is equipped with two time synchronization servers from Meinberg (model LANTIME M3000) that allow the time synchronization of different classes of equipment in the laboratory: the protection devices under test, the RTPSS and the communication network testing devices (see below). The existence of two devices allows flexibility and redundancy.

This is critical when considering HIL applications in which the devices under test must be synchronized with the RTPSS in order to achieve good results. These two timeservers can work either as Master or Slave clocks allowing the utilization of different time synchronization protocols such as:

- Precision Time Protocol (PTP, IEEE 1588) v1 and v2 – This is a state of the art time synchronization protocol, having a precision in the order of 20-100 nanoseconds. A specific profile of the standard was designed for energy applications (PTP Power Profile) and the protocol is applied in networks through Ethernet.
- IRIG-B – a time protocol widely used in power systems. Allows a maximum precision in the order of 1-10 microseconds and works in a dedicated coaxial-wired network.
- SNTP – a time protocol that runs through Ethernet with a maximum precision of 50-100 ms.

3.5 COMMUNICATION INFRASTRUCTURE

In order to integrate the different software and hardware described in the last sections, the laboratory is equipped with a communication infrastructure considering both, optical fiber and Ethernet connections, which bring a great flexibility for the user.

This infrastructure provides the user the possibility to test devices such as IED's with a great simplicity, in an almost plug-and-play environment.

The existing network elements (such as switches and routers) are state of the art (PTP aware as an example) and allow a highly flexible and expandable operation. Different measurement equipment and two different powerful workstations allow the user to perform research under great conditions. The next figure depicts the infrastructure architecture.

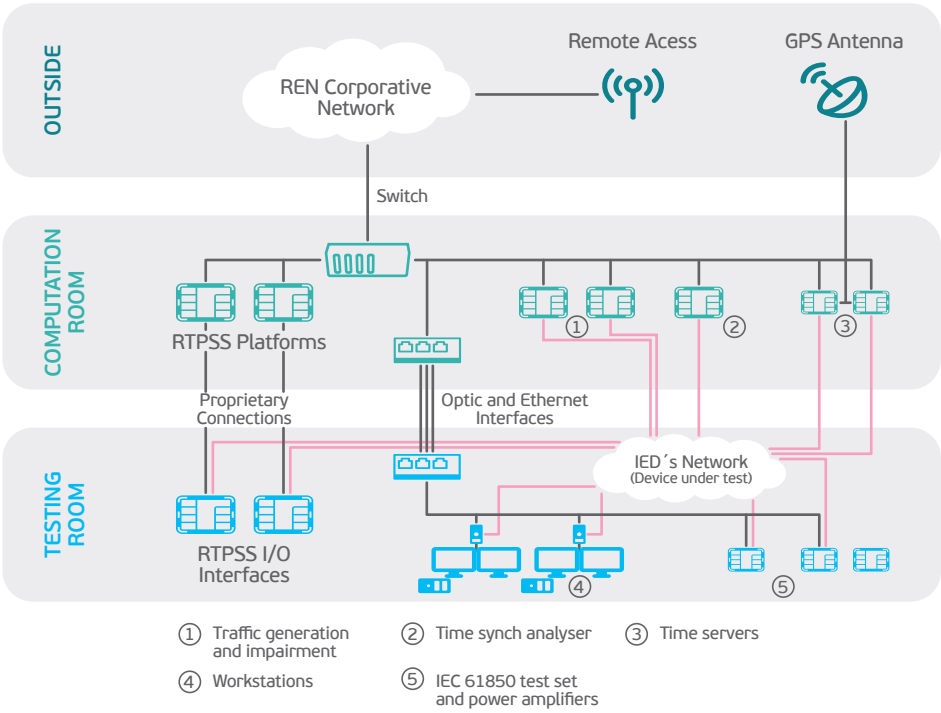

4. POSSIBLE APPLICATIONS

The RTPSS center facility at R&D NESTER allows a very large spectrum set of applications regarding power systems and communication networks. Amongst other, some envisaged applications are:

- Testing
  - Prototype development and product conformance testing;
  - Product type testing;
  - Testing of protection and automation systems;
  - Hardware-in-Loop (HIL) simulations (power network interacting in real time with prototypes, actual IED's or other devices).
- Modelling
  - Model verification (e.g. Linear Elements models – constant parameters transmission lines, pi-circuits; non-linear models - Surge arrester, etc) using field data and event records.
- Scenario Simulation
  - Studies for the optimal integration of renewable energy sources;
  - Power system transient studies;
  - Power system performance assessment in line with European connection grid codes;
  - Analysis of power system events.
- Communications
  - Performing communication networks studies, by means of simulations, to aid its design;
  - HIL simulation of network communications using real devices in interaction with simulated environment;
  - Testing communication networks performance (measuring parameters and causing impairment) to evaluate the impact in control and automation systems.
- Co-simulation
  - Performing co-simulation (power system simulator and communication network simulator running simultaneously, interacting with each other).
    - The co-simulation of power systems and communication networks is crucial to evaluate the effect that failures in communication devices have in the power system.
    - It consists in the joint simulation of both networks, running in parallel and performing synchronized actions.
- Training
  - Staff training for control equipment operation.

CREATING A SMART ENERGY FUTURE

R&D NESTER

Rua Cidade de Goa, 4-B,
2685-038 Sacavém
Tel.: 351 210 011 300
Fax: 351 210 011 710
info@rdnester.com

www.rdnester.com